United States of America

To Promote the Progress of Science and Useful Arts

The Director

of the United States Patent and Trademark Office has received an application for a patent for a new, original, and ornamental design for an article of manufacture. The title and description of the design are enclosed. The requirements of law have been complied with, and it has been determined that a patent on the design shall be granted under the law.

Therefore, this United States

Patent

grants to the person(s) having title to this patent the right to exclude others from making, using, offering for sale, or selling the design throughout the United States of America or importing the design into the United States of America for the term set forth by law.

Katherine Kelly Vidal

DIRECTOR OF THE UNITED STATES PATENT AND TRADEMARK OFFICE

Maintenance Fee Notice

No maintenance fees are required in design patents.

Patent Term Notice

If the application for this patent was filed on or after May 13, 2015, the term of this patent is 15 years from the date of grant of this patent, subject to any disclaimer under 35 U.S.C. 253. If the application for this patent was filed prior to May 13, 2015, the term of this patent is 14 years from the date of grant of this patent, subject to any disclaimer under 35 U.S.C. 253.

US0D1008977S

(12) **United States Design Patent** (10) **Patent No.: US D1,008,977 S**
Zhong (45) **Date of Patent: ** Dec. 26, 2023**

(54) **CHARGE PROTECTOR**

(71) Applicant: **Binglin Zhong**, Guangdong (CN)

(72) Inventor: **Binglin Zhong**, Guangdong (CN)

(**) Term: **15 Years**

(21) Appl. No.: **29/842,973**

(22) Filed: **Jun. 17, 2022**

(51) **LOC (14) Cl.** **13-03**

(52) **U.S. Cl.**
USPC **D13/139.8**

(58) **Field of Classification Search**
USPC ... D13/139.1–139.8, 137.1–137.4, 160, 138, D13/138.2, 133; D10/40; D14/433
CPC H02J 7/0045
See application file for complete search history.

(56) **References Cited**

U.S. PATENT DOCUMENTS

D890,099	S	*	7/2020	Klein	D13/133
D914,609	S	*	3/2021	Mi	D13/137.4
D920,980	S	*	6/2021	Zhang	D14/433
D922,216	S	*	6/2021	Yu	D10/40
D922,217	S	*	6/2021	Yu	D10/40
D926,601	S	*	8/2021	Yu	D10/40
D935,411	S	*	11/2021	Tao	D13/137.2
D941,773	S	*	1/2022	Mi	D13/137.4
D967,037	S	*	10/2022	Oldham, Jr	D13/160
D974,302	S	*	1/2023	Bu	D13/137.4
D982,521	S	*	4/2023	Wu	D13/137.2
D982,523	S	*	4/2023	Wu	D13/137.3

OTHER PUBLICATIONS

"RV Surge . . . " reference dated Nov. 11, 2021 found on the internet at: https://www.amazon.com/NOKEZM-Protector-Indicator-Light% EF%BC%8CSurge-Protection/dp/B09GV26X4R/ref=asc_df_B09GV26X4R/?tag=hyprod-20&linkCode=df0&hvadid=563715190273& hvpos=&hvnetw=g&hvrand=8245964417945428180&hvpone=&hvptwo=&hvqmt=&hvdev=c&hvdvcmdl=.*

* cited by examiner

Primary Examiner — Rhea Shields

(57) **CLAIM**

The ornamental design for a charge protector, as shown and described.

DESCRIPTION

FIG. **1** is a perspective view of a charge protector showing my new design;
FIG. **2** is a front elevational view thereof;
FIG. **3** is a rear elevational view thereof;
FIG. **4** is a left side elevational view thereof;
FIG. **5** is a right side elevational view thereof;
FIG. **6** is a top plan view thereof;
FIG. **7** is a bottom plan view thereof;
FIG. **8** is another perspective view thereof; and,
FIG. **9** is another perspective view thereof.
The broken lines throughout the drawing figures depict portions of the charge protector that form no part of the claimed design.

1 Claim, 9 Drawing Sheets

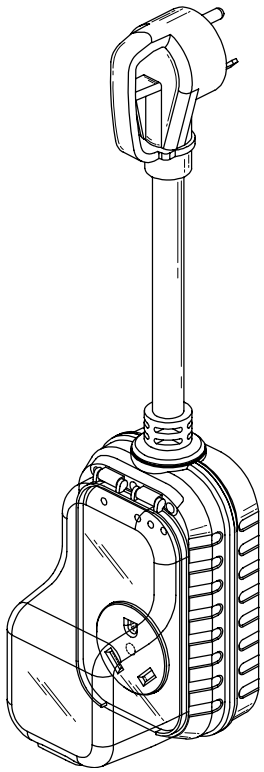

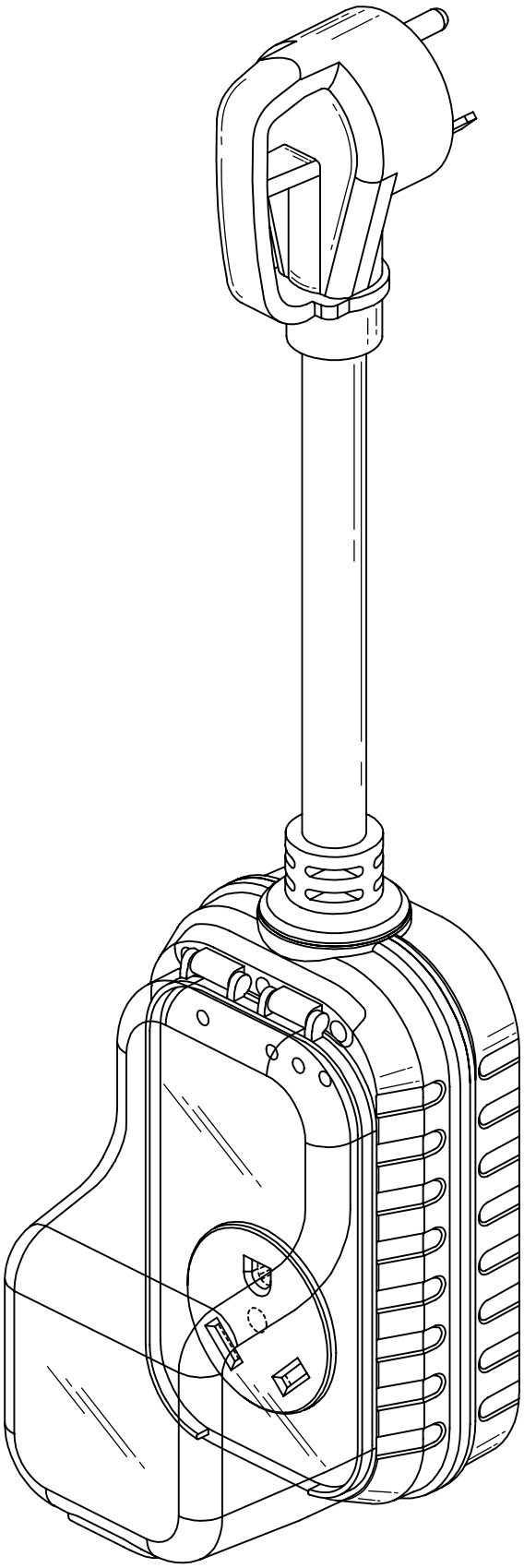

FIG.1

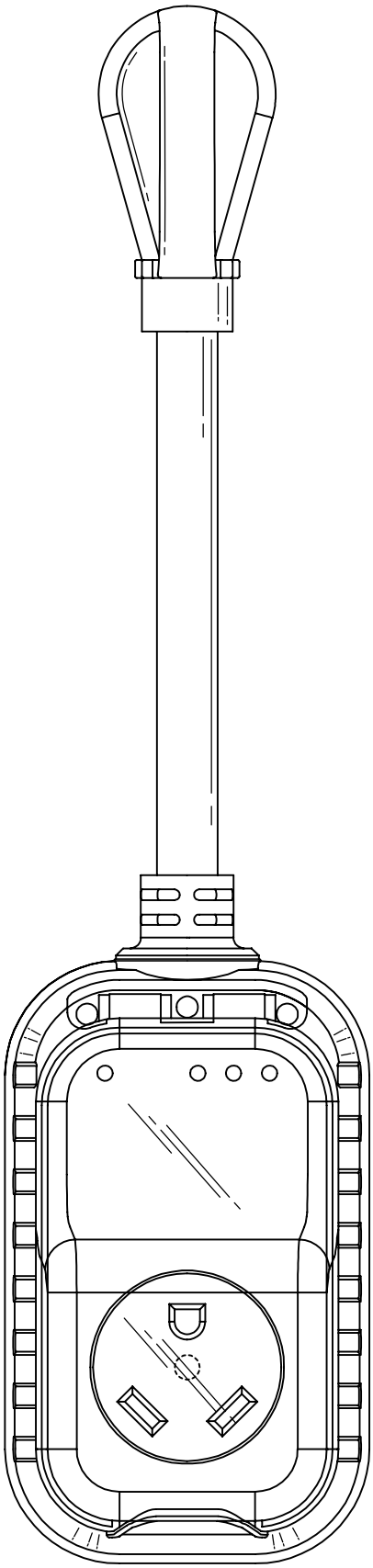

FIG.2

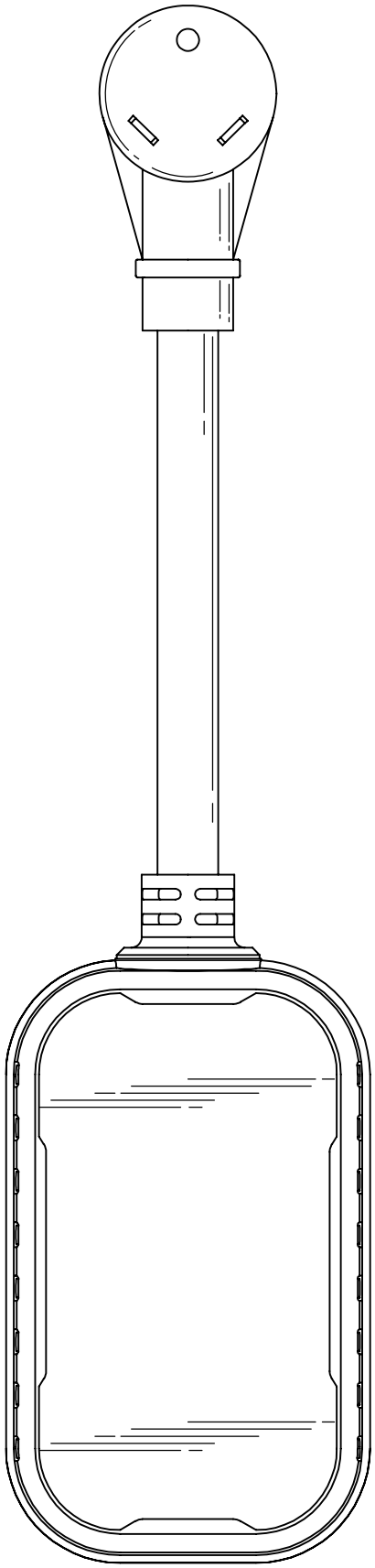

FIG.3

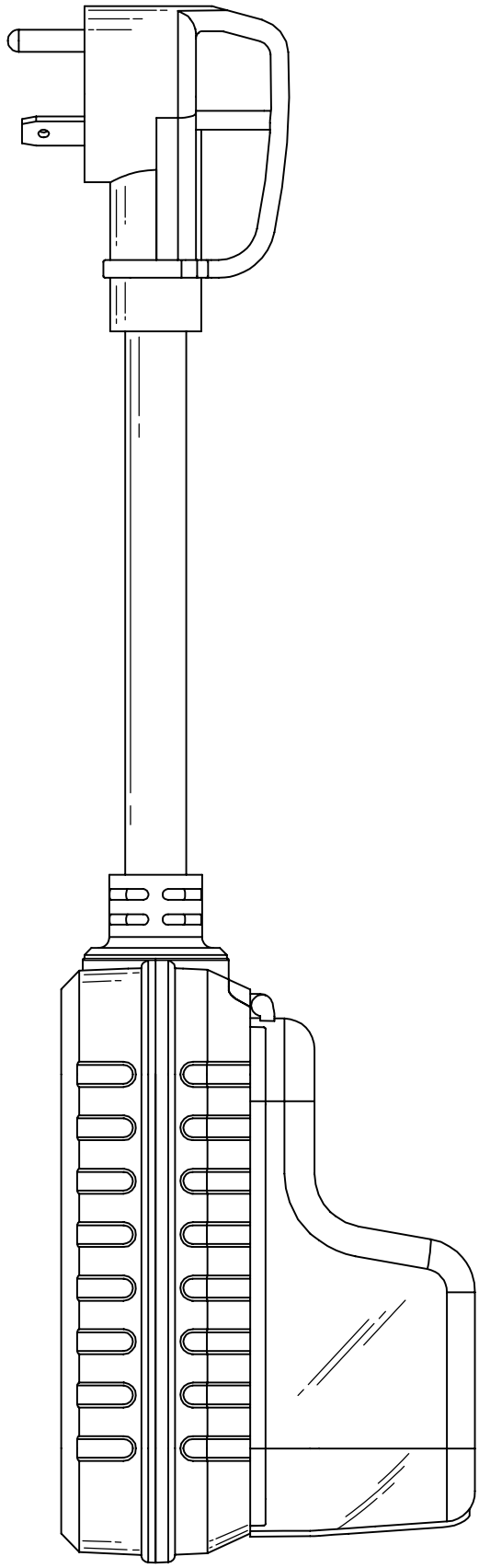

FIG.4

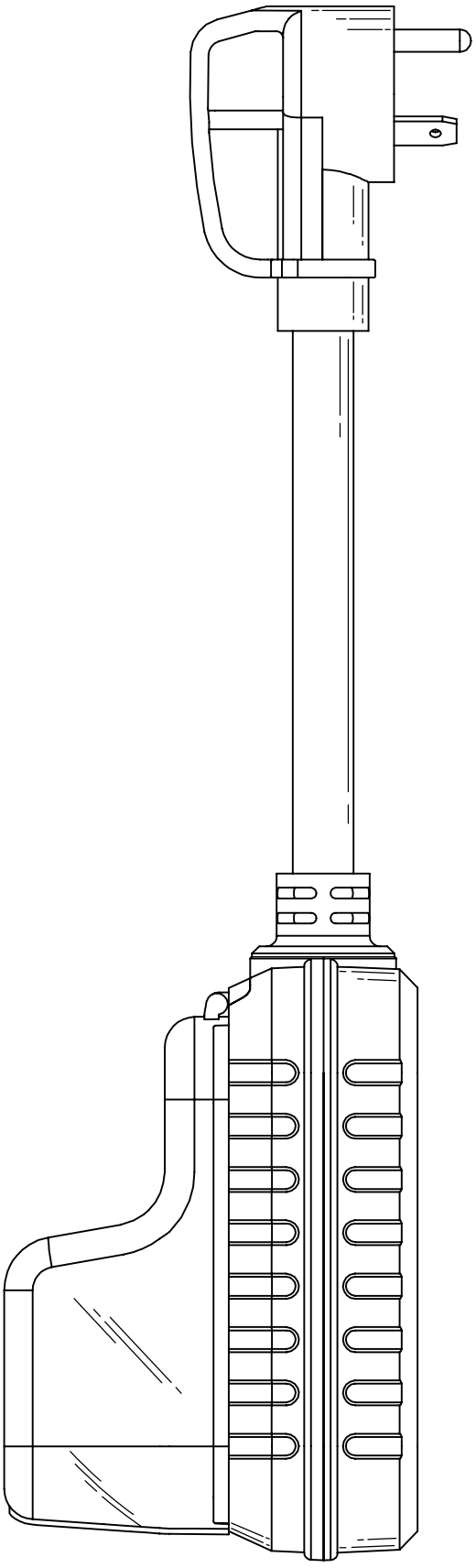

FIG.5

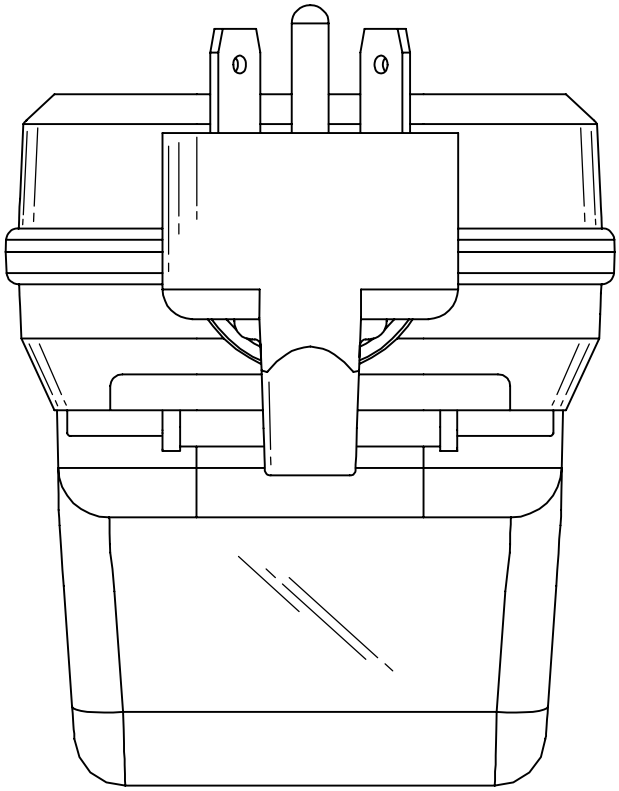

FIG.6

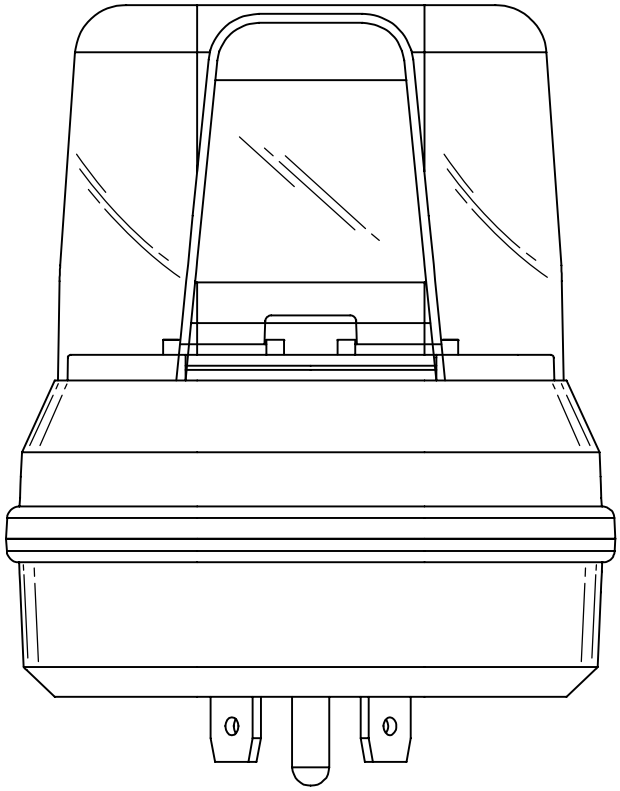

FIG.7

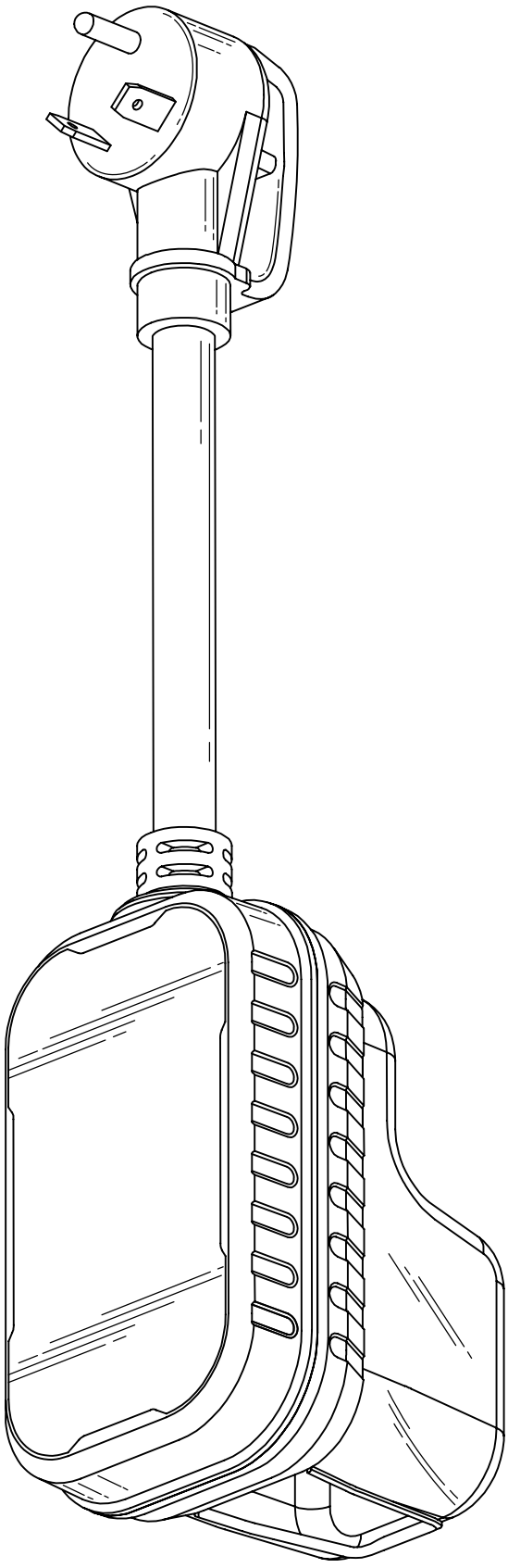

FIG.8

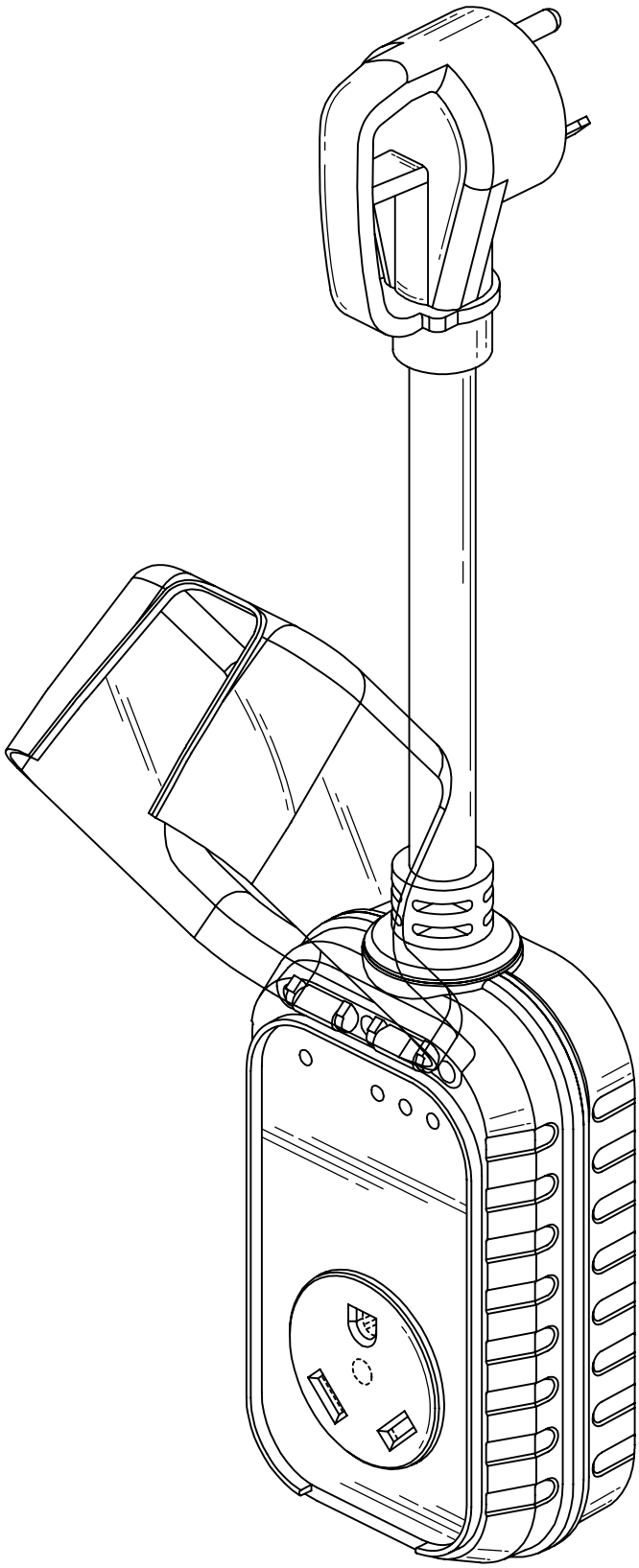

FIG.9